~PARTS LIST~

R	PART	DESCRIPTION	LENGTH	QTY	PROCESS	MATERIAL

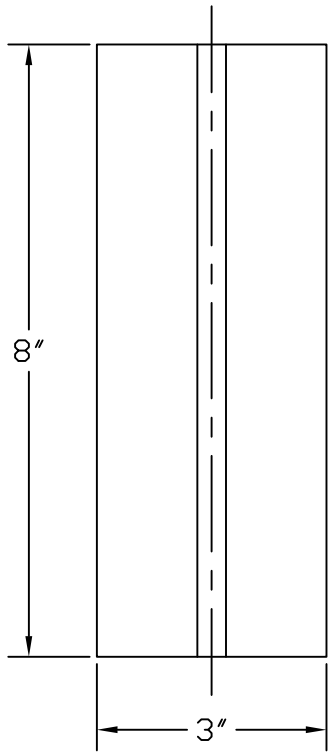

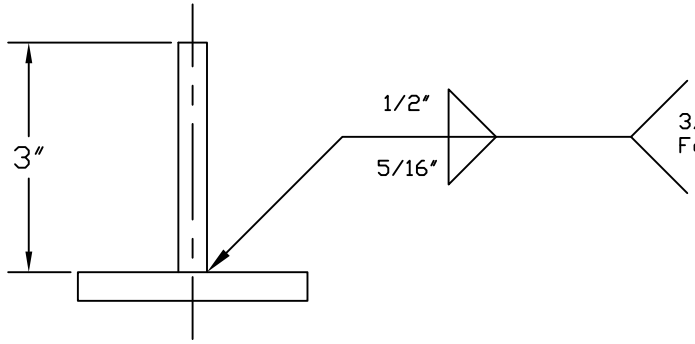

3/32″ E7018
Far side shall consist of 3 passes.

NOTES

~TOLERANCES ARE +- 1/8″
~REMOVE ALL SLAG
~ALL PLATE 3/8″
~WELD IN 3F POSITION

DRAWN BY: CL

NCJLS-WC

DATE: 1/9/13	JOB: T JOINT	DWG: 1 OF 1